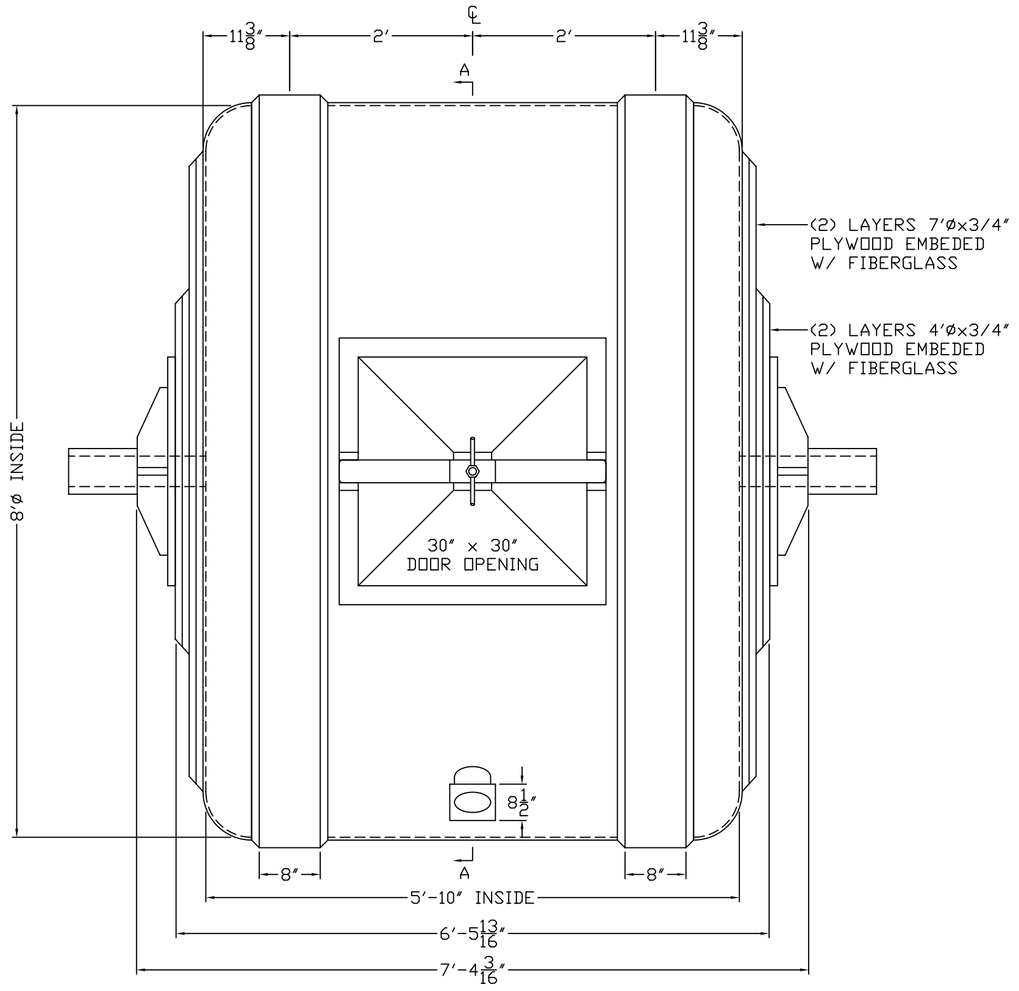

SIDE VIEW
SCALE: 3/4"=1'

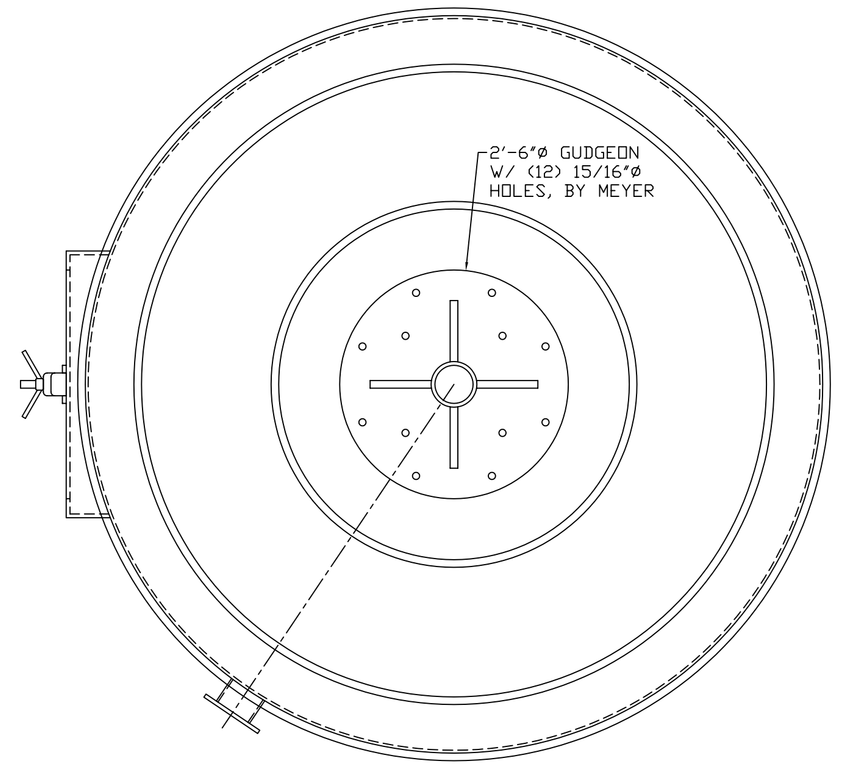

END VIEW
SCALE: 3/4"=1'

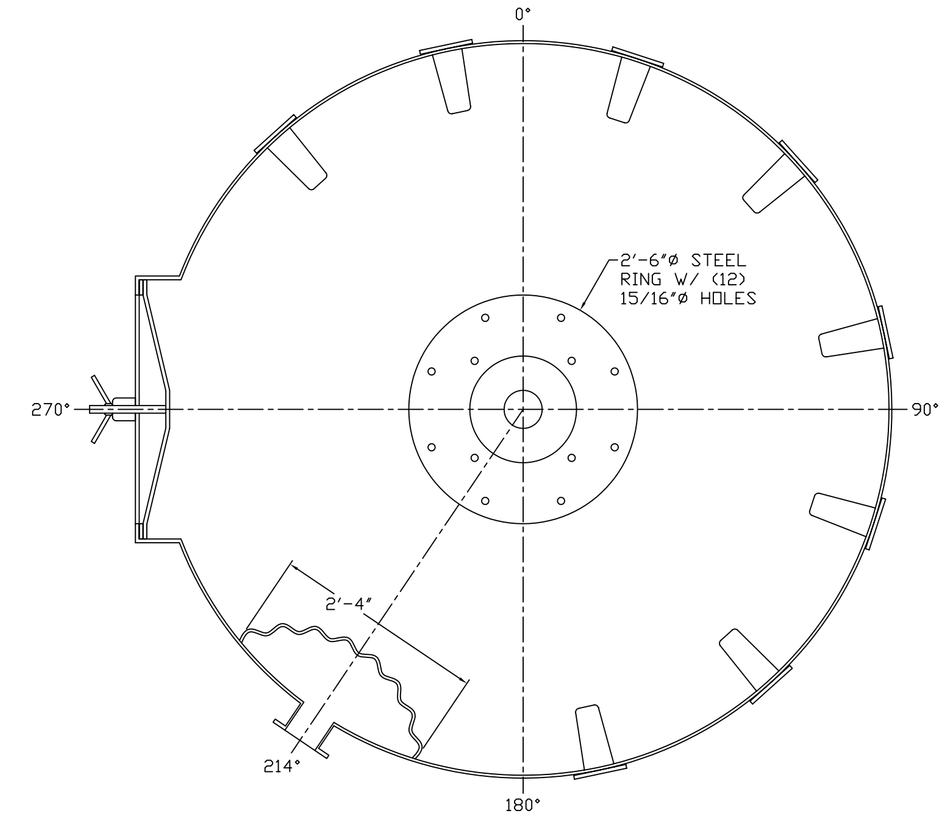

SECTION A-A
SCALE: 3/4"=1'

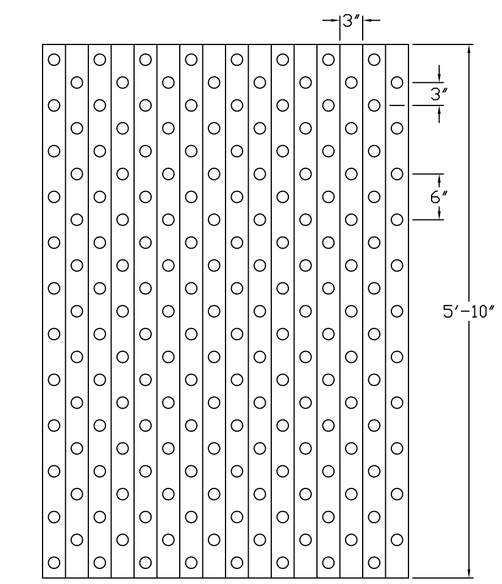

WASH RACK DRILLING DETAIL
APPROX. (184) 1-1/2"ø HOLES
SCALE: 3/4"=1'

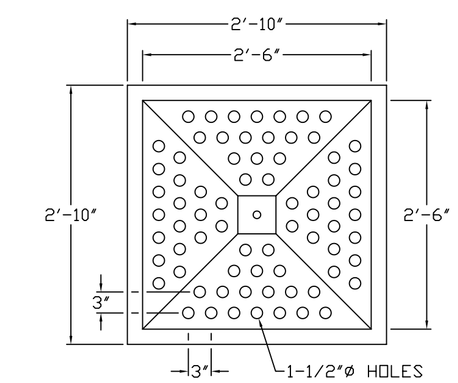

WASH DOOR DRILLING DETAIL
(72) 1-1/2"ø HOLES
SCALE: 3/4"=1'

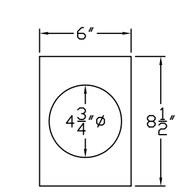

WASH PORT FLANGE DETAIL
SCALE: 1-1/2"=1'

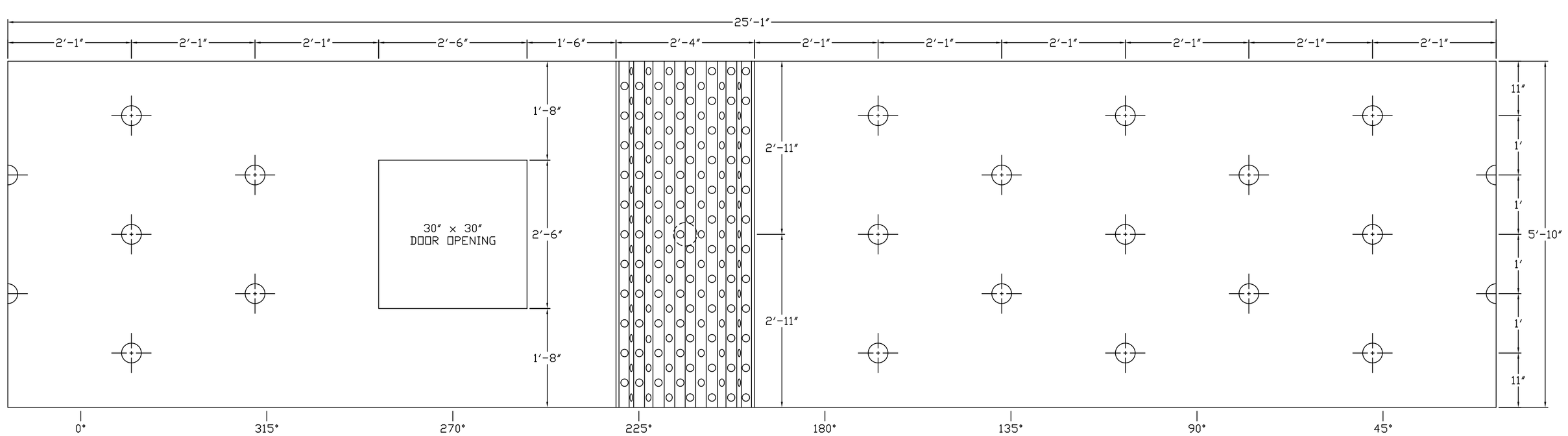

PIN SPACING DETAIL
SCALE: 3/4"=1'

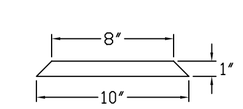

BELT TRACK DETAIL
SCALE: 1-1/2"=1'

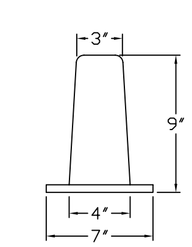

PIN DETAIL
SCALE: 1-1/2"=1'

NOTES:
1) RESIN: HETRON 197P FOR CORROSION BARRIER W/ DION 6631T FOR STRUCTURAL LAYERS.
2) COLOR: SAFETY ORANGE.
3) TWO DOORS TO BE FURNISHED, ONE SOLID DOOR W/ HANDLES & ONE WASH DOOR W/ 1-1/2"ø HOLES.
4) GUDGEONS TO BE FURNISHED BY RICHARD E MEYER & SONS, HARDWARE TO BE FURNISHED BY EMPIRE FIBREGLASS. (24) 7/8"-9x7"L S/S HHCS W/ WASHER & LOCK NUT.

REV	DATE	REVISION
1	06/03/03	UPDATED DRUM LENGTH.

FOR:

SERVICE:
8' DIAMETER 5' 10" LONG FRP MILL (INSIDE DIMENSIONS)

DWG:	DATE:	PROJECT:
JTS	06/03/03	
CHK:	DATE:	
SIZE: D	REV: 1	DRAWING NO: RM-05-19-03
SCALE: 3/4"=1'		